Lambretta

USER MANUAL | ENG

mod.# V125 Special

Introduction

It is with great pleasure that we can announce that you have joined the family of **Lambretta** owners. We would like to thank you for the trust you have placed in us.

Before you took possession of the **Lambretta** produced in our factories, it was subjected to countless tests, which allows us to guarantee its quality.

The service life of your **Lambretta** depends largely on its use and maintenance. This is why we have summarized some advice and instructions that should help you to get to know your new vehicle better and to make the best use of it. Remember that one of the most important tasks of your **Lambretta** dealer is to keep an eye on the proper functioning of your **Lambretta**. **Lambretta** offers you a worldwide network of service partners with a skilled workforce, specialized tools and original spare parts. In case of any needs you have, please contact these facilities.

We wish you a pleasant journey with your new **Lambretta**.

Important manual information

In this manual, all important informations are distinguished by the following notations:

⚠ WARNING **Is a WARNING which has to be followed. Refusing to follow can lead to severe injury or death to the operator.**

CAUTION A CAUTION indicates an important information to avoid damage to the vehicle.

CAUTION

- Please always carry this manual with the vehicle for the rider maintenance/ dealer tracking of service records even if vehicle is being sold.
- This manual contains all of the important information regarding this vehicle, however, the maker will continually improve its product design and quality, which can lead to differences between the manual and vehicle. If you have any questions concerning this manual, please consult your dealer.

⚠ WARNING

FOR YOUR OWN SAFETY, PLEASE READ THIS MANUAL CAREFULLY BEFORE OPERATING THIS VEHICLE. ONLY OPERATE THE VEHICLE AFTER YOU HAVE ADEQUATE KNOWLEDGE ABOUT THE CONTROLS, OPERATION AND FEATURES OF THIS VEHICLE. ONLY OPERATE THE VEHICLE AFTER YOU HAVE BEEN TRAINED IN SAFE AND PROPER RIDING TECHNIQUES. PERIODIC INSPECTIONS, AS WELL AS MAINTENANCE AND GOOD RIDING SKILLS, WILL IMPROVE YOUR SAFETY WHILE RIDING AND INCEASE THE RELIABILITY OF THIS VEHICLE.

*Product and specifications are subject to change without notice.

Important manual information

Dealer label here

Table of contents

Introduction 1
Important manual information 2
Table of contents 4
Safety information 5
Description of the vehicle 8
Side view 8
Controls and instruments 9
Consumer information 10
Vehicle identification number (VIN) 10
Instrument and control functions 11
Main switch 11
Dashboard unit 12
Handlebar switches - Left 13
Handlebar switches - Right 14
Engine start safety switch 14
Brake lever 14
Fuel tank cap 15
Fuel 15
Catalytic converter 15
Seat 16
Storage Luggage Box 16
Rear Carrier 17
Side stand 17
Main stand 17
Combined brake system (CBS) 18
Anti-lock braking system (ABS) 18
Pre-operation checks 19
Pre-operation check list 20
Operation and important riding points 21
Starting the engine 21
Starting off 21
Acceleration / Deceleration 21
Braking 21
Parking 22
Engine break in 22
Periodic maintenance and minor repair 23
Owner's tool kit 23
Battery cover 24
Spark plug 24
Engine oil 25
Final transmission oil 26
Air filter 27
ECU 27
Throttle cable free play 27
Tires 27
Rims 29
Brake lever free play 29
Brake pads 30
Brake fluid 30
Cables 31
Throttle grip and cable 31
Lubricating the brake levers 31
Main stand / Side stand 32
Front fork 32
Steering 33
Wheel bearings 33
Battery 33
Fuses 34
Lighting 35
Troubleshooting 36
Clean and storage 38
Clean the vehicle 38
Storage 39
Specifications 40
Dimensions 40
Space for notes 43

This Lambretta is a two wheeled vehicle. Safe driving and good operation depends on the proper riding technique of the operator.
The operator, should entirely know and understand the requirements before riding.

He or she should:
- Be well trained and familiar with all the aspects of vehicle operation.
- Fully read and be aware of the maintenance requirements that are noted in this user manual.
- Obtain qualified training & a legal license for the operation of this vehicle.
- Contact a professional and certified repair shop/dealer to maintain the good mechanical condition and safety of the vehicle whenever needed.

Safe riding:
- Always pre-check your vehicle before riding to ensure the safety of the vehicle.
- Please follow the load limitations of operator and passenger.

Many motorcycle accidents occur due to car drivers who fail to recognize the motorcyclists.

Therefore:
- Wear bright colored and protective clothes.
- Operate the turning signals before turning and slow down your speed when approaching the intersection.
- Keep proper distance to other Motorists, and let them be aware of your presence.
- Know your skills and limits.
- Never lend your vehicle to others who are not qualified for riding.
- Always follow the legal speed limits and local traffic law.
- The posture of the operator and passenger is important for proper control. A proper riding posture can keep the vehicle better balanced while riding
- Sit upright with both hands on the handlebar and both feet on the footrest while driving.
- The passenger should make sure that he/she can reach the passenger grips or hold on tho the operator directly, with both feet on the passenger footrests.
- Driving after consuming alcohol or illegal drugs is strictly prohibited.
- This vehicle is designed for onroad use only. It is not suitable for off-road use.

Protective clothing
Proper clothing will keep you safe from potential accidents:
- Always wear an approved helmet with face shield to protect your eyes from dust and rain.
- The wearing of a proper jacket, shoes, gloves etc., provides better

protection, and can reduce the degree of injuries from accidents.

- Never wear loose clothes, otherwise they could catch on the control levers or wheels and cause severe injuries or an accident.
- Never touch the engine or exhaust system during or after operation. They become very hot and can cause burns. Always wear protective clothing that cover your legs, ankles, and feet.

Modifications

Modifications made to this vehicle which are not approved by the maker, or the removal of original equipment, may make the vehicle unsafe for use and can cause severe injury. Modifications may also make your vehicle illegal to use.

Loading and accessories

Adding accessories or cargo to your vehicle will cause a different weight distribution of the vehicle and influence the steering & balance. It may cause the possibility of an accident.

Be extremely cautious and follow the limitations below when equipped with accessories / cargo. Below are some guidelines to follow if loading cargo or adding accessories to your vehicle.

Loading

The total weight of the operator, passenger (when allowed), accessories and cargo must not exceed the maximum load limit.

Maximum load
(not including the vehicle):
150 kg

When loading within this weight limit, keep in mind:

- Cargo and accessory weight should be kept as low and close to the vehicle as possible. Make sure to distribute the weight as evenly as possible on both sides of the vehicle to minimize imbalance or instability.
- Make sure that accessories and cargo are securely attached to the vehicle before riding
- Never attach any large or heavy items to the handlebar, front fork, or front fender. Such items can create unstable handling or a slow steering response.

Accessories

Genuine accessories have been specifically designed for the use on this vehicle. If needed, please contact with your dealer for further detail. Since the maker can not test all other accessories, you are personally responble for the proper selection, installation and use of non OEM accessories.

Keep the following guidelines in mind, when mounting accessories:

- Never install accessories or carry cargo that would influence the ground clearance, limit the suspension of travel, steering, or obscure lights or turning lights, reflectors.

- Accessories on the handlebar or front suspension area will cause bad influence on steering the vehicle. If you will install accessories, please keep them light in weight and not interfere on the steering of the vehicle. This vehicle is for On-Road transportation purpose only, please do not install any of extended cargo carrier which will make vehicle unstable in cross winds and/or vehicle turns.
- If equipping with electrical accessories, please consult qualifiled stores, to make sure such items will not exceed the capacity of the vehicle's electrical system. Unproper installation of such items may cause a dangerous loss of lights, lower the engine power or even damage the vehicle.

Gasoline and exhaust gas

- GASOLINE IS HIGHLY FLAMMABLE:
- Always turn the engine off when refueling.
- Take care not to spill any gasoline on the engine (hot) or exhaust system when refueling.
- Do not smoke or use a Mobile phone while refueling.
- Never start the engine or let it run for any length of time in a closed area. The exhaust gases are poisonous and may cause loss of consciousness and death within a short time.
- Always turn the engine off before leaving the vehicle and remove the key from the main switch. When parking the vehicle, please note:
- The engine and exhaust system remain hot, therefore, park the vehicle in a place where pedestrians or children are not likely to touch these hot areas.
- Do not park the vehicle on a slope or soft ground, otherwise it may fall over.
- Do not park your vehicle near to flammable place.
- In case of swallowing any gasoline, or getting gasoline into your eyes, please see your doctor immediately. Keep gasoline away from your skin and if contact, wash thotoughly with water.

Other safe-riding points

- Activate the turning signal before making turns.
- When raining or riding on a wet road or slippery surfaces or cobblestones keep your speed low, using light braking to avoid slipping or even falling down.
- Be careful when passing parked cars. A driver might not see you and open a door into your path.

Side view

1. Front disc brake
2. Front wheel
3. Front turn signal light
4. Headlight
5. Rear view mirror
6. Seat
7. Storage compartment
8. Fuel tank cap
9. Rear Carrier
10. Tail/brake light
11. Rear turn signal light
12. Air filter element
13. Rear disc brake
14. Rear wheel
15. Mainstand
16. Pedal
17. Sidestand
18. Battery

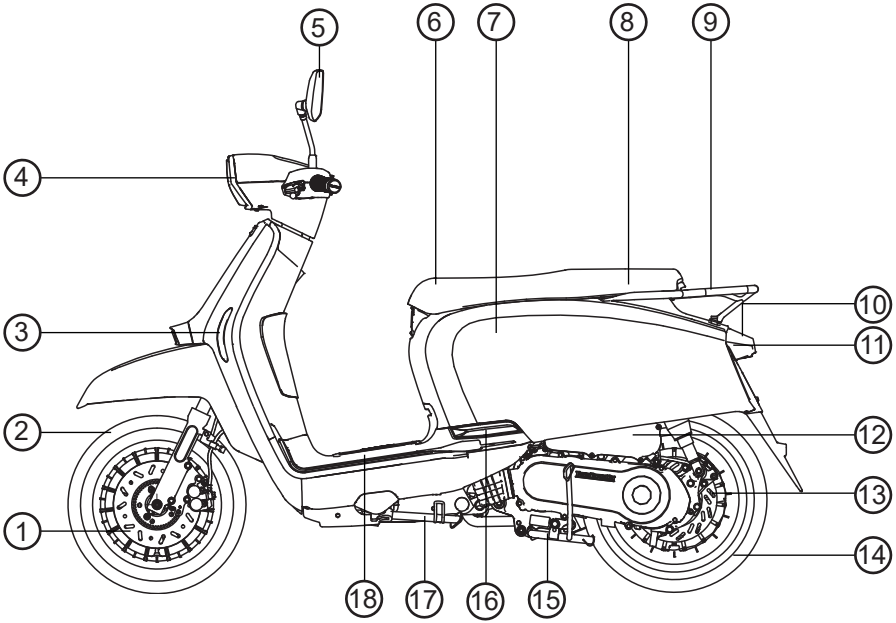

Controls and instruments

1. Left handlebar switches
2. Rear brake lever
3. Speedometer unit
4. Right handlebar switches
5. Throttle grip
6. Front brake lever
7. Main switch/steering lock

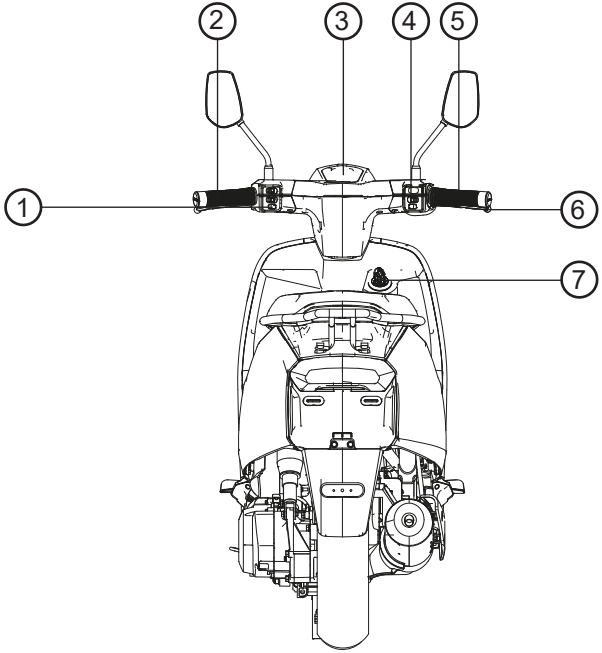

Vehicle identification number (VIN)

Please write down the VIN (vehicle identification number) to order replacement parts from your dealer or in case the vehicle gets stolen.

The VIN is stamped into the frame and located in the glove compartment (1).

The engine number is located under the engine near the main stand mount (2).

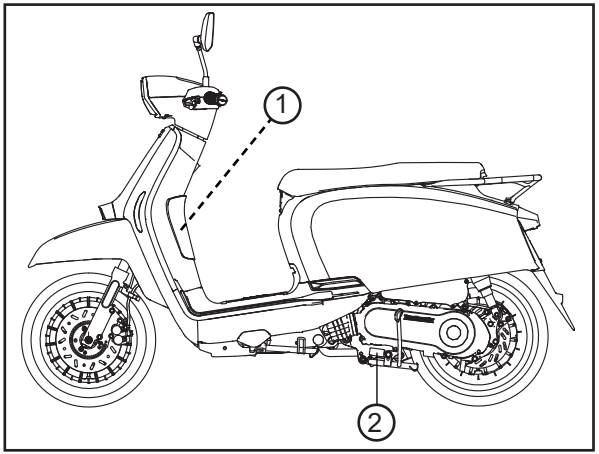

CAUTION

The vehicle identification number is used to identify your motorcycle and may be used to register your vehicle with the licensing authority in your area.

Main switch

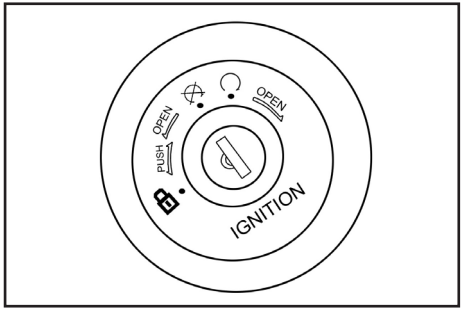

The main switch controls the ignition and lighting systems, and is also used to lock the steering, open the seat and open the glove compartment. The various functions are described as below.

On

All electrical circuits are supplied with power, the engine can be started. The key cannot be removed.

Off

All electrical systems are off. The key can be removed.

Lock

The steering is locked, and all electrical systems are off. The key can be removed.

Lock and unlock the steering lock

1. Turn the handlebar all the way to the left.
2. Push the key in and turn it to the position „🔒“ (Lock) while still pushing it.
3. Remove the key.
4. Push the key in and then turn it to „⊗“ (Off) to unlock the steering lock.

⚠ WARNING

Never turn the key to ⊗ or 🔒 , while the vehicle is moving, otherwise the electrical systems will be switched off, which may result in loss of control or an accident. Make sure that the vehicle is stopped before turning the key.

Open the seat:

When in position „⊗“ (Off) , turn the key counterclockwise without pushing it in to open the seat.

Open the glove compartment:

When in position „↻“ (On) , turn the key clockwise while pushing it in to open the glove compartment.

Dashboard unit

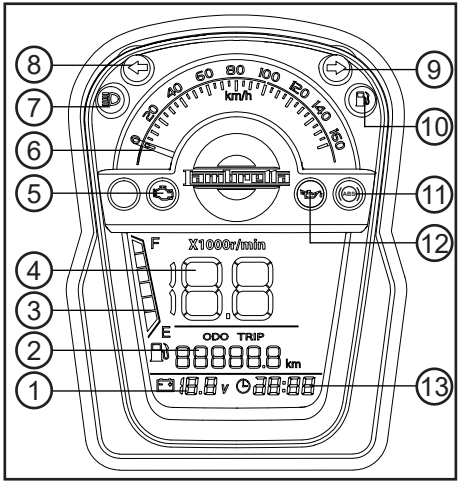

1. Voltmeter
2. Odometer
3. Fuel gauge
4. Rev counter
5. Engine warning light (EOBD)
6. Speedometer
7. High beam indicator lamp
8. Turn signal indicator left
9. Turn signal indicator right
10. Fuel warning indicator
11. ABS control lamp
12. Oil check indicator
13. Clock

1. Voltmeter
The Voltmeter shows the current voltage of the battery.

2. Odometer
The odometer shows the total distance traveled (ODO) or the trip distance traveled (TRIP). To switch between ODO and TRIP, shortly press the SET button.
To reset the TRIP distance, press and hold the SET button for about 2 seconds when in TRIP mode.
To switch from kilometers to miles, press the SET button for 5 seconds when in ODO mode.

3. Fuel gauge
The fuel gauge shows how much fuel is left in the fuel tank. The gauge has 6 bars which are all black if the tank is full. As the tank empties, each bar disappears one by one from top to bottom. If only the last bar remains, it will start to blink, to indicate that there is very little fuel remaining in the tank. Refuel immediately.

4. Rev counter
The rev counter shows the current number of revolutions of the engine.

5. Engine warning light (EOBD)
When you turn on the ignition, the lamp lights up. After starting the engine, it disappears. If your vehicle detects a failure in the system, the warning lamp lights up. Contact a dealer to check with a diagnosis tool.

6. Speedometer
The speedometer shows the current riding speed.

7. High beam indicator lamp
Lights up whenever high beam is switched on.

8. Turn signal indicator left
This indicator light flashes when the turn signal light is activated.

9. Turn signal indicator right
This indicator light flashes when the turn signal light is activated.
10. Fuel warning indicator
The fuel warning indicator lights up if little fuel is left in the tank. Refuel immediately.

CAUTION

Take care that the fuel tank does not get completely drained. This will cause the engine to stall which can result in loss of control or an accident.

11. ABS control lamp (depending on equipment variant)
When turning on the ignition the ABS control lamp will light up. As soon as you start riding and reach a riding speed of approximately 5 km/h the ABS control lamp will disappear. If the lamp lights up while riding, there is a failure in the ABS system. As long as the ABS control lamp lights up the ABS is not working. In this case contact your dealer to check the ABS system.

12. Oil check indicator
This indicator lights up every 1000km to remind the user to check the oil level and if needed fill it up.
Reset the indicator: When in ODO mode, press the SET button for 5 seconds and the indicator will reset.

13. Clock
The clock shows the current time.
Set the time: When in ODO mode hold the SET button for 2 seconds to enter the clock setting. The digit to set will blink. Shortly press the SET button to go up one by one. When ready with setting push the button for 2 seconds to go to the next digit. When finished setting the clock press the button for 2 seconds. Also the tiime will be saved if there is no interaction for more than 30 seconds.

Handlebar switches - Left

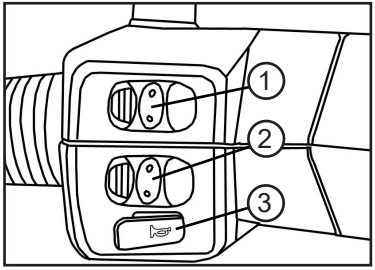

1. High / Low beam switch /
2. Turn signal switch
3. Horn button

1. High / Low beam switch /
Set this switch to for the high beam and to for the low beam.

2. Turn signal switch
To indicate a right-hand turn, push the button and slide the whole switch right. To indicate a left-hand turn, push the button and slide the whole switch left. To deactivate the turn signal, push the button and slide the switch back to the middle.

3. Horn button
Push this button to sound the horn.

Handlebar switches - Right

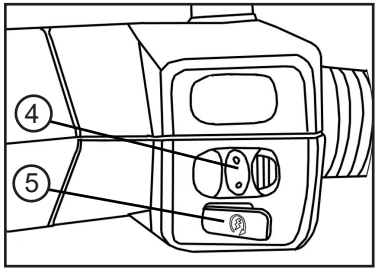

4. SET button
5. Electric start button

4. SET button
The SET button is needed for several interactions with the dashboard unit such as changing from ODO to TRIP, setting the time, changing from miles to kilometers.

5. Electro start button
Push this button and pull a brake lever to the start the engine.

CAUTION

Before starting the vehicle check the operation and important riding points in the user manual.

Engine start safety switch

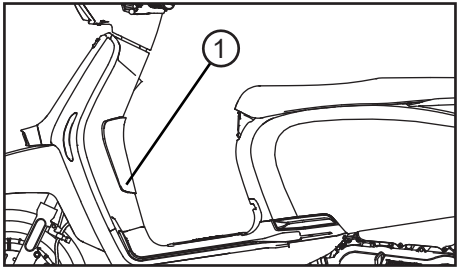

If the engine start safety switch (1) is in the „" (Lock) position, the vehicle cannot be started. The electrical system won´t be deactivated.

Brake lever

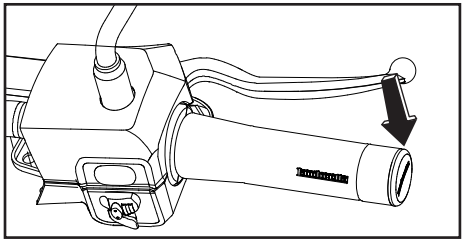

The front brake lever is located on the right handlebar grip. To apply the front brake, pull this lever towards the handlebar grip.

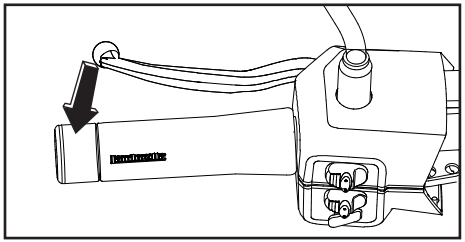

The rear brake lever is located on the left handlebar grip. To apply the rear brake, pull this lever towards the handlebar grip.

Fuel tank cap

The fuel cap is located under the seat.

Remove the fuel tank cap (1)
Turn the fuel tank cap counterclockwise. Now you can remove the fuel tank cap.

Install the fuel tank cap
Push the fuel tank cap into position. Turn the cap clockwise to the original position.

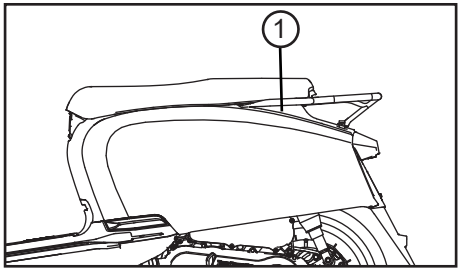

CAUTION
Make sure that the fuel tank cap is properly closed and locked before riding.

Fuel

Make sure that there is sufficient fuel in the tank. Fill the fuel tank to the bottom of the filler tube as shown.

⚠ WARNING
- **Do not overfill the fuel tank, otherwise it may overflow when the fuel warms up and expands.**
- **Avoid spilling fuel on the hot engine.**

CAUTION
Immediately wipe off spilled fuel with a clean, dry, soft cloth, since fuel may damage the painted surfaces or plastic parts.

Regular unleaded gasoline only.
Recommended fuel: 95 oct

E10

Catalytic converter

This model is equipped with a catalytic converter in the exhaust system.

⚠ WARNING
The exhaust system is hot after operation. Make sure that the exhaust system has cooled down before doing any maintenance work.

CAUTION

The following precautions must be observed to prevent a fire hazard or other damages.

- Use only unleaded gasoline. The use of leaded gasoline will cause unrepairable damage to the catalytic converter.
- Never park the vehicle near possible fire hazards such as grass or other materials that easily burn.
- Do not allow the engine to idle too long.

Seat

To open the seat

1. Place the vehicle on the main stand.
2. When in „⊗" (Off) position, turn the key counterclockwise without pushing it in to open the seat.
3. Fold the seat up.

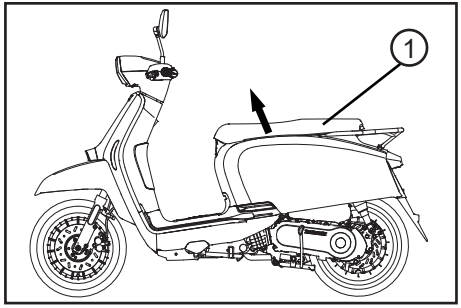

To close the seat

1. Fold the seat down, and then push it down to lock it in place.

CAUTION

- When you close the seat by force, parts can be damaged.
- Make sure that the seat is locked before driving or when you park the vehicle.

Storage Luggage Box

The storage luggage box (1) is located under the seat. When the seat is opened, the storage luggage box can be taken out, to reach the fuses and the throttle housing.

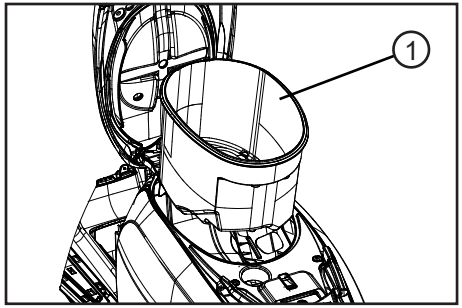

CAUTION

Do not exceed the load limit of 10 kg for the storage luggage box.
Since the storage luggage box will accumulate heat from the sun and engine, please do not put any thing that is sentitive to heat inside the box.
Do not put anything valuable or breakable objects in the storage luggage box.

Rear Carrier

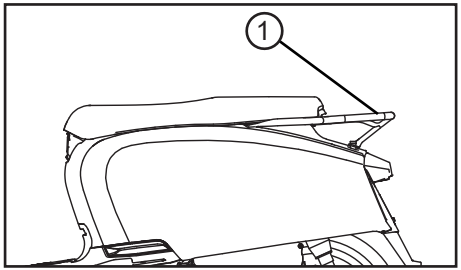

CAUTION

Do not exceed the load limit of 5kg for the carrier (1).

Side stand

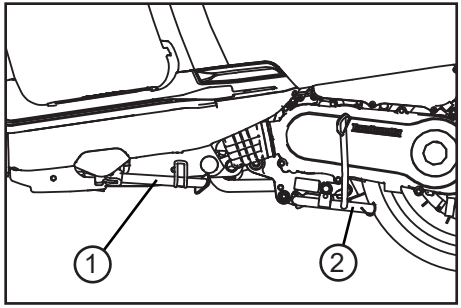

The side stand (1) is located on the left side of the vehicle. Step on the bracket with your foot to slide out the side stand.

CAUTION

- Make sure your vehicle is parked well and stable enough to stand the vehicle.
- Only park on flat ground and avoid slopes and soft ground.
- The side stand is equipped with an engine kill switch. If the stand is folded out the engine cannot be started.

Main stand

The main stand (2) is located under the Vehicle. To engage the main stand, use your foot to step on the bracket of the main stand and then pull the vehicle on the stand.

CAUTION

Make sure your vehicle is parked well and stable enough to avoid topple over.

Combined brake system (CBS) (depending on equipment variant)

The CBS (Combined Brake System) is a combined brake system which contributes to the road safety support of your motorcycle.
Your vehicle is equipped with a single CBS.
When the left brake lever is pulled, this simultaneously activates both the front and rear brakes, therefore reducing the risk of one of the two wheels locking.

⚠ WARNING
Although both brakes are activated by the rear brake lever, the front brake still needs to be operated for a correct deceleration of the motorcycle.

Anti-lock braking system (ABS) (depending on equipment variant)

The ABS (Anti-lock braking system) is designed to help prevent locking up the wheels, when the brakes are applied hard. The ABS works with two seperate circuits for front and rear wheel. If the ABS sensors notice the locking of a wheel, the brake force is reduced slightly until the wheel turns again.
When the ABS is working a little vibration can be felt on the brake lever.
The application of the brakes is like on a conventional motorcycle:
The left brake lever activates the rear brake, the right brake lever activates the front brake.

Although the ABS provides stability while stopping by preventing wheel lock-up, remember the following characteristics:

- ABS cannot compensate bad road conditions, misjudgement or improper application of the brakes. You must take the same care as with motorcycles which are not equipped with ABS.
- ABS is not designed to shorten the braking distance. On loose, uneven or downhill surfaces, the stopping distance of a scooter's with ABS may be longer than that of an equivalent motorcycle without ABS. Use special caution in such areas.
- ABS will help prevent wheel lock-up during straight-up braking, but it cannot control wheel slip which may be caused by braking during cornering. When turning a corner, it is better to limit braking to the light application of both brakes or not to brake at all.. Reduce your speed before you get into the corner.
- The computers integrated in the ABS compare vehicle speed with wheel speed. Since non-recommended tires can affect wheel speed, they may confuse the computers, which can extend braking distance.

Pre-operation checks

The condition of a vehicle is the owner's responsibility. The operator should check the vehicle by a simple but thorough inspection, to make sure of the vehicle´s condition, checking some key and important parts, to prevent the vehicle from serious failure / accident. Please carefully check the following points before each ride.

CAUTION

Pre-operation checks should be made each time the vehicle is used. Such an inspection can be accomplished in a very short time; and the added safety it assures is more than worth the time involved.

⚠ WARNING

If any item in the Pre-operation check list is not working properly , have it inspected and repaired before operating the vehicle. If failed to be corrected by yourself, please return to the repair shop immediately.

Pre-operation check list

Checkpoint	To verify
Fuel	Check fuel level in the fuel tank. Refuel if necessary. Check the fuel line for leakage.
Engine / Transmission oil	Check oil level. If necessary, add recommended oil to specified level. Check for oil leakage.
Front brake	Check operation. If soft or spongy, have dealer bleed hydraulic system. Check brake pads for wear, replace if necessary. Check brake fluid level in reservoir, if necessary, add recommended brake fluid to specified level. Check for leakage.
Rear brake	Check operation. If soft or spongy, have dealer bleed hydraulic system. Check brake pads for wear, replace if necessary. Check brake fluid level in reservoir, if necessary, add recommended brake fluid to specified level. Check for leakage.
Throttle grip	Make sure that operation is smooth. Check cable free play. If necessary, have dealer adjust the cable free play and lubricate cable and grip housing.
Wheels and tires	Check for damage. Check tire condition and tread depth. Check air pressure.
Brake levers	Make sure that operation is smooth. Lubricate lever pivoting points if necessary.
Main stand / Side stand	Make sure that operation is smooth. Lubricate pivot if necessary.
Chassis fasteners	Make sure that all nuts, bolts and screws are properly tightened. Tighten if necessary.
Instruments, lights, signals and switches	Check operation, correct if necessary

⚠ WARNING

- **Before riding the vehicle, please make sure that you are fully familiar with all operating controls & their functions before riding. Consult a dealer if you not thoroughly understand.**
- **Please do not start the engine in a closed area, the exhaust air are poisonous, and inhaling them can cause loss of consciousness and even death within a short time.**

Starting the engine

CAUTION

Note the point „Engine break in" before you start riding the vehicle.

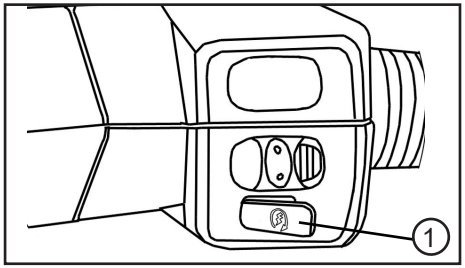

1. Turn the key to ON.
2. Pull the right brake lever otherwise the vehicle will not start.
3. Push the start swich button (1) for a few seconds.

CAUTION

- Do not crank the engine more than 5 seconds on any attempt.
- The engine starts immediately upon actuation of the starter, then wait a few seconds before you try to start it again. Each starting process should be as short as possible in order to save the battery and the starter.

Starting off

CAUTION

Before starting off, allow the engine to warm up to avoid damages.

1. While pulling the rear brake lever with your left hand and holding the carrier with your right hand, push the vehicle off the main stand.
2. Sit astride the seat, and then adjust the rear view mirrors.
3. Switch the turn signal on to the direction you wish to turn.
4. Check for oncoming traffic, and then slowly turn the throttle grip (on the right) in order to take off.
5. Switch the turn signal off.

Acceleration / Deceleration

The speed can be adjusted by opening and closing the throttle. To increase the speed, turn the throttle grip in direction (a). To reduce the speed, turn the throttle grip in direction (b).

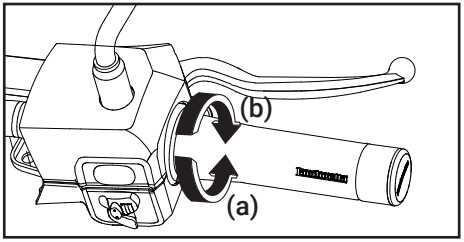

Braking

- Close the throttle completely.

- Apply both front and rear brakes simultaneously while gradually increasing the pressure.

WARNING

- **Avoid braking hard or suddenly, otherwise the vehicle may skid.**
- **Railroad crossings, streetcar rails, iron plates on road construction sites, and manhole covers become extremely slippery when wet. Therefore, slow down when approaching such areas and cross them with caution.**
- **Keep in mind that braking on a wet road is much more difficult.**
- **Ride slowly down a hill, as braking downhill can be very difficult.**

Front

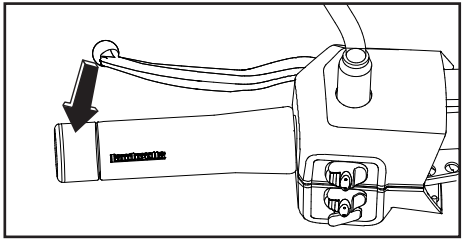

Rear

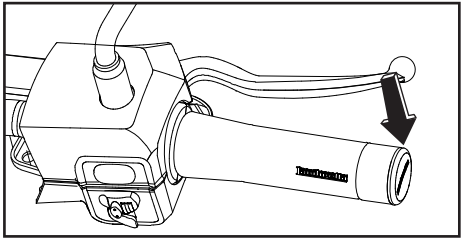

CBS (depending on equipment variant)
As the vehicle is equipped with CBS, please refer to the information regarding the CBS in „Instrument and control functions“

ABS (depending on equipment variant)
As the vehicle is equipped with ABS, please refer to the information regarding the ABS in „instrument and control functions“

Parking

When parking, stop the engine, and then remove the key from the main switch.

WARNING

Since the engine and exhaust system can become very hot, park in a place where pedestrians or children are not likely to touch them. Do not park on a slope or on soft ground, otherwise the vehicle may overturn.

Engine break in

Since the engine is brand new, do not put an excessive load on it for the first 1000 km. The various parts in the engine wear and polish themselves to the correct operating clearances.
During this period, prolonged full-throttle operation or any condition that might result in engine overheating must be avoided.

CAUTION

If any engine trouble should occur during the engine break-in period, immediately have a dealer check the vehicle.

CAUTION

Most of the Safety and condition of the vehicle depend on how you do the correct maintenance, periodic inspection, adjustment and lubrication. The following are contents that help the operator to do such skills on the following pages.

⚠ WARNING

Maintenance, replacement, or repair of the emission control devices and systems may be performed by any repair shop or individual that is certified and must follow the local law regulations.
If you are not familiar with maintenance work, have a dealer do it for you.

Owner's tool kit

The owner's tool kit (1) is located inside the rear storage luggage box.

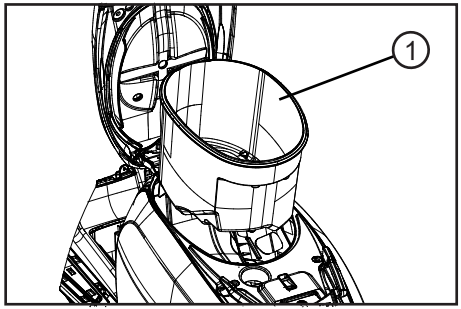

The service information included in this manual and the tools provided in the owner's tool kit are intended to assist you in the performance of preventive maintenance and minor repairs. However, additional tools such as a torque wrench may be necessary to perform certain maintenance work correctly.

CAUTION

If you do not have the tools or experience required for a particular job, have a dealer perform it for you.

⚠ WARNING

Modifications not approved by maker may cause loss of performance, excessive emissions, and render the vehicle unsafe for use. Consult a dealer before attempting any changes.
Modifications without authorization of the manufacturer cause the warranty to be voided.

Battery cover

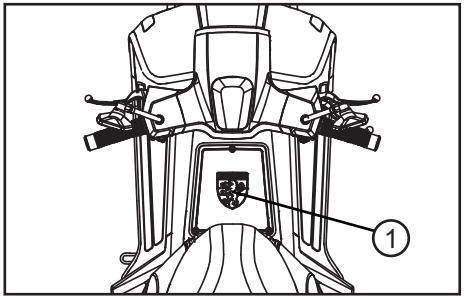

The cover (1) needs to be removed to perform some of the maintenance jobs described in this chapter.

Remove the cover
Remove the screws, and then take the cover off.

Install the cover
Place the cover in the original position, and then install the screws.

Spark plug

The spark plug is an important engine component, which is easy to check. Since heat and deposits will cause any spark plug to slowly erode, the spark plug should be removed and checked in accordance with the periodic maintenance and lubrication chart. In addition, the condition of the spark plug can reveal the condition of the engine.

Check the spark plug

1. Remove cover
2. Remove the spark plug cap
3. Remove the spark plug as shown, with the spark plug wrench included in the owner's tool kit.
4. Check that the porcelain insulator (1) around the center electrode of the spark plug is a medium-to-light tan (the ideal color when the vehicle is ridden normally).

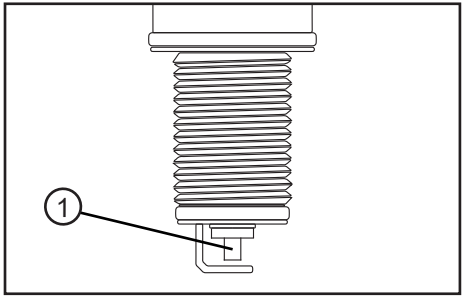

CAUTION

If the spark plug shows a distinctly different color, the engine could be operating improperly. Do not attempt to diagnose such problems yourself. Instead, have a dealer check the vehicle.

5. Check the spark plug for electrode corrosion and excessive carbon or other deposits, and replace it if necessary.

Specified spark plug:
NGK - CR7HSA

⚠ WARNING

Please note that no other spark plug model is allowed. Using a different spark plug model can immediately lead to engine damage.

6. Measure the spark plug gap with a wire thickness gauge and, if necessary, adjust the gap to specification.Clean the surface of the spark plug gasket and its mating surface, and then wipe off any grime from the spark plug threads.
7. Install the spark plug with the spark plug wrench, and then tighten it to the specified torque.

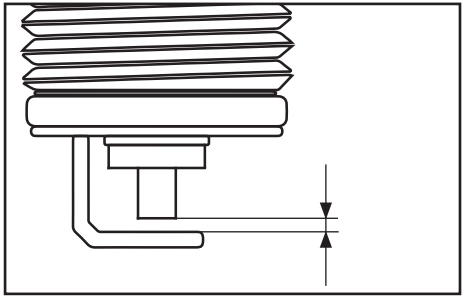

Spark plug gap: 0,6 - 0,7 mm

⚠ WARNING

Please note the max. torque when inserting the plug.
If you do not have the ability to control this you should leave control of the spark plug to the dealer.

Tightening torque: 10 Nm

Engine oil

⚠ WARNING

It is recommended to check the engine oil at each refuelling.

1. Start the engine and warm it up for several minutes. After the engine is warm, turn off the ignition and let it cool down one minute before checking.
2. Open the main stand, and take out the oil level gauge (1) to clean it.
3. Reinsert oil level gauge (1), don't screw it. Take out the oil level gauge (1) and check it, the oil level should be between the upper (2) and lower (3) limits.

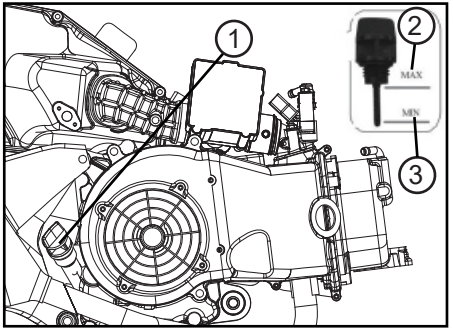

CAUTION

Make sure that the oil level gauge is properly installed before riding the vehicle.

Engine Oil capacity:
0,7 l at oil change

Viscosity: 10W-30

Final transmission oil

The final transmission case (1) must be checked for oil leakage before each ride. If any leakage is found, have a dealer check and repair the vehicle. In addition, the final transmission oil must be changed at the intervals specified in the periodic maintenance and lubrication chart.

CAUTION

As long as the vehicle is within the warranty period the dealer is responsible to change the gear oil.

Change the final transmission oil

1. Start the engine, warm up the final transmission oil by riding the vehicle for several minutes, and then stop the engine.
2. Place the vehicle on the main stand.
3. Place an oil pan under the final transmission case to collect the used oil.
4. Remove the oil filler cap (1) and drain bolt (2) to drain the oil from the final transmission case.

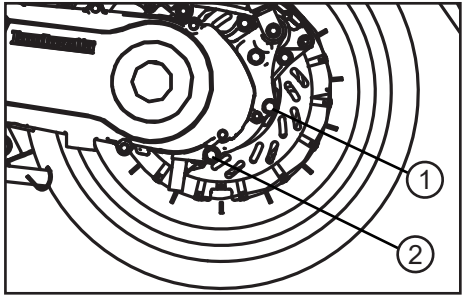

5. Install the final transmission oil drain bolt, and then tighten it to the specified torque.

Tightening torque: 10-15 Nm

6. Add the requested amount of the recommended final transmission oil, and then install and tighten the oil filler cap.

Transmission Oil capacity:
0,17 l at oil change

Viscosity: SAE 85W-90

WARNING

- **Make sure that no foreign material enters the final transmission case.**
- **Make sure that no oil gets on the tire or wheel.**

7. Check the final transmission case for oil leakage. If oil is leaking please contact your dealer.

Air filter

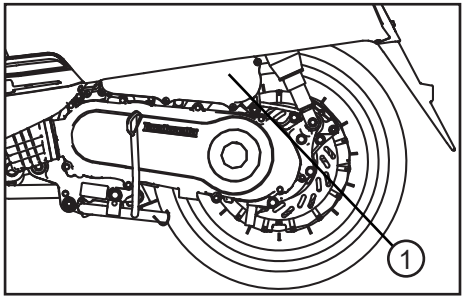

The air filter should be replaced according to the maintenance schedule. Replace the air filter more often if you drive in unusually wet or dusty areas.

Replace the air filter

1. Remove the air filter case (1).
2. Pull the air filter out.
3. Replace the filter with a new one or clean it.
4. Coat the mating surfaces of the air filter case and air filter case cover lightly with grease for an airtight seal.
5. Install the air filter.
6. Install the air filter case cover by installing the screws.

CAUTION

- Make sure that the air filter element is properly seated in the air filter case.
- The engine should never be operated without the air filter element installed, otherwise the piston and/or cylinder may become excessively worn.

ECU

The ECU is an important part of the engine and its emission control system, which requires very sophisticated adjustment. Therefore, ECU adjustments should be left to dealer, who has the necessary professional knowledge and experience.

Throttle cable free play

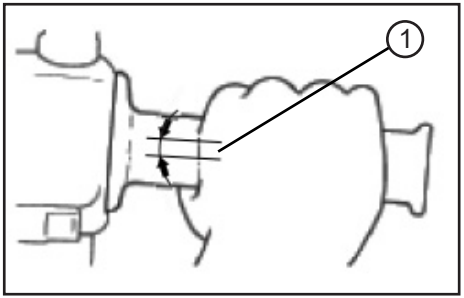

The throttle cable free play (1) should measure 2 ~ 6 mm at the throttle grip.

CAUTION

Periodically check the throttle cable free play and, if necessary, have a dealer adjust it.

Tires

To maximize the performance, durability, and safe operation of your vehicle, note the following points regarding the specified tires.

Tire air pressure

The tire air pressure should be checked and, if necessary, adjusted before each ride.

⚠ WARNING

The tire air pressure must be checked and adjusted on cold tires (i.e., when the temperature of the tires equals the ambient temperature).
The tire air pressure must be adjusted in accordance with the riding condition. If you are not familiar to this, please ask a dealer for help.

Tire air pressure:
Front: 1,75 bar
Rear: 2,0 bar

Total weight of rider, passenger, cargo and accessories!

⚠ WARNING

Do not overload your vehicle, since it will increase pressure on the tire, braking, steering than the original design, and may cause damge or even lead to an accident.
Allocation of your cargo and weight of your vehicle is very important for your own safety and the vehicle´s performance. Load your cargo only on the vehicle and put the heaviest cargo to the center of vehicle, then distribute the weight evenly from side to side. This should ensure good steering after loading.

Maximum load*: 150 kg
*Total weight of rider, passenger, cargo and accessories

Tire inspection

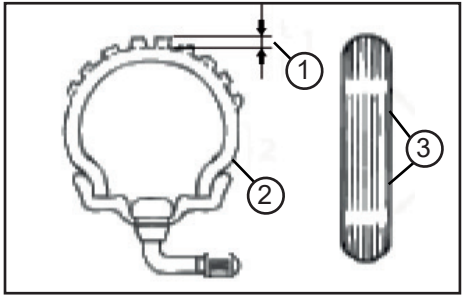

1. Tire tread depth
2. Tire sidewall
3. Tire wear indicator

⚠ WARNING

The tires must be checked before each ride. If a tire tread shows crosswise lines (minimum tread depth), if the tire has a nail or glass fragments in it, or if the sidewall is cracked, have a dealer replace the tire immediately.

CAUTION

The tread depth may vary depending on country. Observe local regulations. The values listed here are technical values and may differ from the legal values of your region.

Technical tire tread depth:
Front and rear: min. 1,6 mm

WARNING

- **Driving with worn tires is illegal, reduces stability and can lead to loss of control of the vehicle.**
- **Let worn or damaged tires be replaced immediately by your dealer.**

Dimensions tires / rims

Front
Rim: 3,0×12
Tire: 110/70-12

Rear
Rim: 3,5×12
Tire: 120/70-12

Tyre type: Tubeless

Rims

To maximize the performance, durability, and safe operation of your motorcycle, note the following points regarding the specified wheels.

- The wheel rims should be checked for cracks, bends or warpage before each ride. If any damage is found, have a dealer replace the wheel. Do not attempt even the smallest repair to the wheel. A deformed or cracked wheel must be replaced.
- The wheel should be balanced whenever either the tire or wheel has been changed or replaced. An unbalanced wheel can result in poor performance, adverse handling characteristics, and a shortened tire life.
- Ride at moderate speeds after changing a tire since the tire surface must first be "broken in" for it to develop its optimal characteristics.

Brake lever free play

CAUTION

There should be no free play at the brake lever end. If there is free play, have a dealer inspect the brake system.

WARNING

A soft or spongy feeling in the brake lever can indicate the presence of air in the hydraulic system. If there is air in the hydraulic system, have a dealer bleed the system before operating the

motorcycle. Air in the hydraulic system will diminish the braking performance, which may result in loss of control and an accident.

Brake pads

The brake pads must be checked for wear at the intervals specified in the periodic maintenance and lubrication chart.

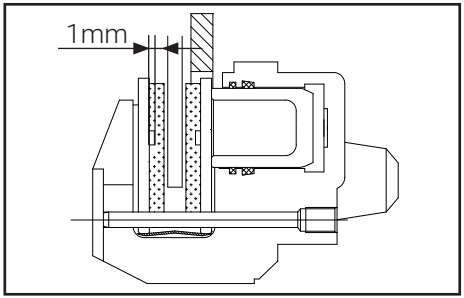

Each brake pad is provided with a wear indicator, a notch, which allows you to check the brake pad wear without having to disassemble the brake. To check the brake pad wear, check if the wear indicator almost touches the brake disc. In this case have a dealer replace the brake pads as a set.

Brake fluid

⚠ WARNING

Insufficient brake fluid may allow air to enter the brake system, possibly causing it to become ineffective.
Before riding, check that the break fluid is above the minimum level mark (1) and refill it if necessary.

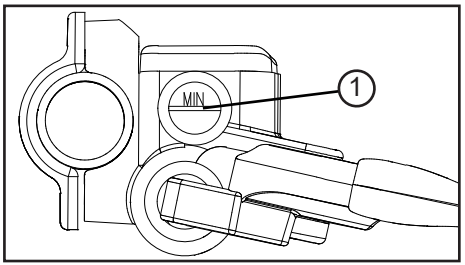

- Low position brake fluid level may indicate worn brake pads and/or brake system leakage.
- If the brake fluid level is low, be sure to check the brake pads for wear and the brake system for leakage.
- When checking the fluid level, make sure that the top of the master cylinder is level by turning the handlebars.
- Use only the recommended quality brake fluid, otherwise the rubber seals may deteriorate, causing leakage and poor braking performance.

DOT 4 break fluid
(Only use brake fluid out from an unopened container)

- Refill with the same type of brake fluid. Mixing fluids may result in a harmful chemical reaction and lead to poor braking performance.
- Be careful that water does not enter the master cylinder when refilling. Water will significantly lower the boiling point of the fluid and may result in vapor lock.
- Brake fluid may deteriorate painted

surfaces or plastic parts. Always clean up spilled fluid immediately.

- As the brake pads wear, it is normal for the brake fluid level to gradually go down. However, if the brake fluid level goes down suddenly, have a dealer check.

Changing the brake fluid

WARNING

Have a dealer change the brake fluid at the intervals specified in the NOTE after the periodic maintenance and lubrication chart.

Cables

The operation of all control cables and the condition of the cables should be checked before each ride, and the cables and cable ends should be lubricated if necessary. If a cable is damaged or does not move smoothly, have a dealer check or replace it.

WARNING

Damage to the outer housing of cables may result in internal rusting and cause interference with cable movement. Replace damaged cables as soon as possible to prevent unsafe conditions.

Throttle grip and cable

The operation of the throttle grip should be checked before each ride. In addition, the cable should be lubricated at the intervals specified in the periodic maintenance chart.

Lubricating the brake levers

The pivoting points of the front and rear brake levers must be lubricated at the intervals specified in the periodic maintenance and lubrication chart.

Front brake lever

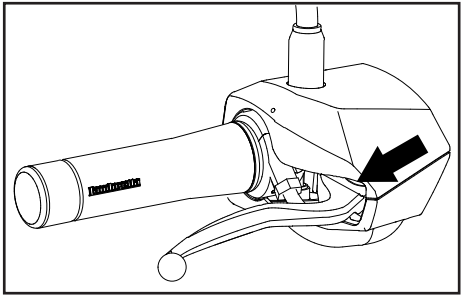

Rear brake lever

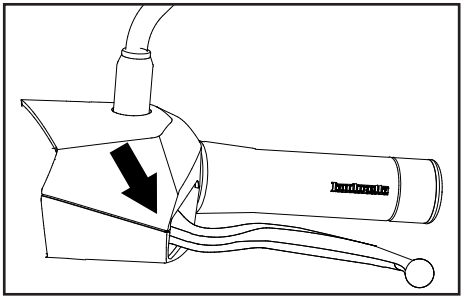

Main stand / Side stand

CAUTION

The operation of the main (1) and side (2) stand should be checked before each ride, and the pivots and metal-to-metal contact surfaces should be lubricated if necessary.

⚠ WARNING

- **If one of the stands does not move up and down smoothly, have a dealer check or repair it.**
- **The side stand is equipped with an engine kill switch. If the stand is folded out the engine cannot be started.**

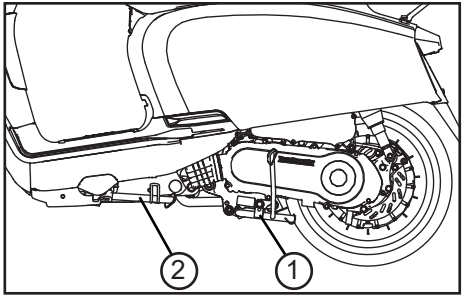

Front fork

The condition and operation of the front fork must be checked as follows at the intervals specified in the periodic maintenance and lubrication chart.

⚠ WARNING

Securely support the motorcycle so that there is no danger of it falling over.

4. Place the vehicle on a flat surface on the main stand.
5. Check the inner tubes for scratches, damage and oil leakage.
6. When not on the main stand, apply the front brake and push the handlebars several times down hard to verify the suspension works freely.

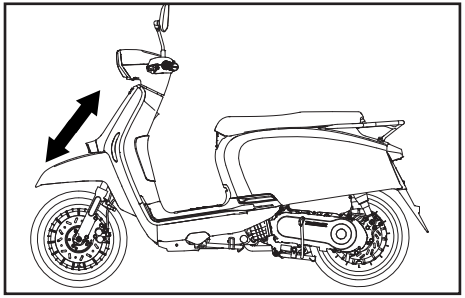

⚠ WARNING

- **When there is damage to the fork, please contact your dealer.**
- **If you treat the telescopic fork with cleaning agents, make sure that they get no contact with the tires or the brakes. This can lead to severe accidents.**

Steering

WARNING

Worn or loose steering bearings may cause danger. Therefore, the operation of the steering must be checked as follows at the intervals specified in the periodic maintenance and lubrication chart.

1. Place the vehicle on the center stand/suitable motorcycle stand to raise the front wheel off the ground.
2. Hold the lower ends of the front fork legs and try to move them forward and backward.
3. If any free play can be felt, have a dealer check or repair the steering.

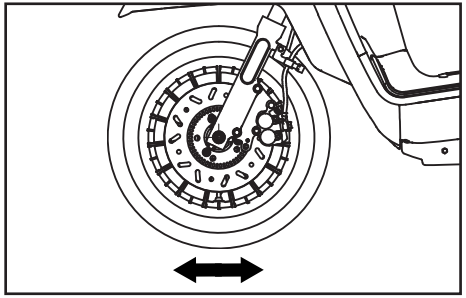

Wheel bearings

The front and rear wheel bearings must be checked at the intervals specified in the periodic maintenance and lubrication chart.

CAUTION

If there is play in the wheel hub or if the wheel does not turn smoothly, have a dealer check the wheel bearings.

Battery

This model is equipped with a maintenance free battery. There is no need to check the electrolyte or to add distilled water.

WARNING

- **Do not remove the battery vent seal, this can be dangerous, and the battery could be permanently damaged.**
- **Battery acid is poisonous and dangerous, it contains sulfuric acid and leads to dangerous burns.**
- **Avoid skin, eye and clothing contact. Protect your eyes always when working near the battery.**
- **Upon contact with the battery acid, perform immediate FIRST AID.**
- **If any skin or eye contact with the battery acid, rinse the affected areas with plenty of water.**
- **If accidentally swallow any battery acid, drink large amounts of water.**
- **In all cases, as soon as possible, see a doctor.**

- **Batteries develop explosive hydrogen gas. Keep open flames, smoking materials away from the battery and make sure there is adequate ventilation when you charge a battery indoors.**
- **KEEP THIS AND ALL BATTERIES OUT OF THE REACH OF CHILDREN.**

Charge the battery

Have a dealer charge the battery as soon as possible if it seems to have discharged. Keep in mind that the battery tends to discharge more quickly if the vehicle is equipped with optional electrical accessories.

Store the battery

- If the vehicle will not be used for more than one month, remove the battery, fully charge it, and then place it in a cool, dry place.
- If the battery will be stored for more than two months, check it at least once a month and fully charge it if necessary.
- Fully charge the battery before installation.
- After installation, make sure that the battery cables are properly connected to the battery terminals.

WARNING

Please contact your dealer if you are not familiar with handling the battery.

CAUTION

Always keep the battery charged. Storing a discharged battery can cause permanent battery damage.

Clean the battery

Even though the battery is a maintenance free type, it still has to be cleaned:

- Turn off the ignition
- Remove the battery cover.
- Remove the positive and then the negative cable from the battery.
- Clean the Terminals from dirt and corrosion.
- Put a bit of grease on the terminals before attaching the cables again.
- Attach the negative cable first and then the positive cable.

Fuses

The fuse holder (1) is located under the storage luggage box.

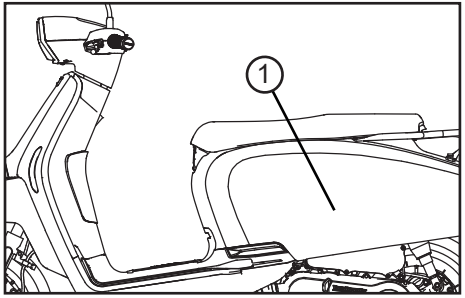

Replacing the fuse

1. Turn the key to „OFF“ and turn off all electrical circuits.
2. Open the seat and take out the storage luggage box.
3. Remove the blown fuse, and then install a new fuse of the specified amperage.

Specified fuses:
10, 15, 20, 30 A

WARNING

Do not use a fuse of a higher amperage rating than recommended to avoid causing extensive damage to the electrical system and possibly a fire.

4. Turn the key to and turn on the electrical circuits to check if the devices operate.
5. If the fuse immediately blows again, have a dealer check the electrical system.

Fuse	Circuit
10 A	Lights
10 A	Starter relay fuse
15 A	EFI & main switch
20 A	Battery
30 A	ABS System (depending on equipment variant)

Lighting

All lights on this vehicle are equipped with LED. If a light is damaged, contact your dealer to replace it.

Headlight adjustment

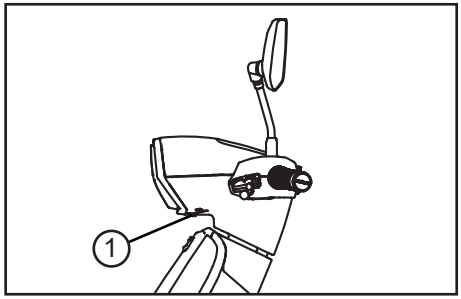

The headlight beam can be adjusted. Unscrew the screw under the headlight and adjust it. After adjusting fasten it again.

Troubleshooting

Lambretta

Although all our Lambrettas receive a thorough inspection before the shipment from the factory, trouble may occur during operation. Any problem in the fuel, compression, or ignition system, for example, can cause poor starting ability and loss of power.
The following troubleshooting chart represents a quick and easy procedure for checking these vital systems by yourself. However, should your vehicle require any repair, consult your dealer, whose skilled technicians have the necessary tools, experience, and knowhow to service the vehicle properly.
Use genuine replacement parts only. Imitation parts may look like parts, but they are often inferior have a shorter life time and can lead to an even more expensive repair.

⚠ WARNING

Keep away from open flames and do not smoke while checking or working on the fuel system.

Troubleshooting chart

Failure	Cause	To Do
Engine does not start when the electric start button is pushed	Battery discharged	Charge the battery
		Check the charging of the battery Check if the generator is working correctly
	A fuse is blown	Check the fuses
	Starter relay defective	Check the starter relay
	Starter motor defective	Check the starter motor
Engine turns but does not start or stalls	A fuse is blown	Check the fuses
	Idle speed is not set correctly	Contact your dealer to identify the failure
	Spark plug is contaminated	Clean the spark plug
	Failure in ignition system	Check the ignition system

Troubleshooting chart

Failure	Cause	To Do
Engine turns but does not start or stalls	Wire harness is worn	Check the wiring harness
	Contact problem in a plug	Check the plugs of the wiring harness
	No gasoline in the tank	Refill gasoline
	Problem with the fuel pump	Check the fuel pump
	Fuel leakage	Check the fuel circuit
Engine power is poor	Air filter contaminated	Clean the air filter
	Failure in fuel system	Check the fuel system
	Problem with the ignition system	Check the ignition system, contact your dealer
	Valve clearance too little	Contact your dealer to adjust the valve clearance
Engine overheats	Long operating time at higher engine speed but low or no driving speed	Let the engine cool down, avoid such driving behavior, especially in city traffic
To high oil consumption	Engine oil level too high	Bleed the oil system to the right specified of oil
	Cylinder/Piston is worn	Contact your dealer to replace the cylinder/ piston
	Engine ventilation does not work correctly	Check the engine ventilation system
Engine warning light is on	Failure in the fuel injection/electric system	Contact your dealer to identify the failure

Clean the vehicle

Cleaning the vehicle in a proper and suitable way will make it attractive, extend its life and optimize the performance.

Before cleaning

1. Let the engine/ muffler cool down. Cover the muffler outlet with a plastic bag to prevent water getting inside.
2. Close all caps, covers and electrical connectors so no water can get inside.

CAUTION

- Do not use acid-based cleaners. If products need to be used for stubborn stains, use them selectively, dry it immediately afterwards and then apply a corrosion protection spray.
- Always follow the manufacturer's instructions on care and cleaning agents.
- Use only water and mild detergents or special cleaners from the dealer to the sensitive components of the vehicle to prevent damage. Dry the plastic parts with a soft, dry cloth or sponge.
- Protect particularly plastic parts, paint, headlight glass from harsh chemicals such as fuel, rust remover, brake cleaner or similar. The use of such agents may result in malfunction, damage and affect the security itself.
- Do not use a high pressure washer or steam cleaner. This can cause water to penetrate bearings, electrical components such as connectors or switches, lighting, ventilation hoses, brake shoes and brake linings or damage, seals, paint and other surfaces.

Cleaning after normal use

Remove dirt with warm water, a mild detergent, and a soft, clean sponge, and then rinse thoroughly with clean water. Use a toothbrush or bottlebrush for hard-to-reach areas.

Cleaning after riding in the rain, near the sea or on salt-sprayed roads

CAUTION

Since sea salt or salt sprayed on the roads during winter are extremely corrosive in combination with water, carry out the following steps after each ride.

- Wait until the engine / exhaust have cooled.
- Clean the vehicle with warm water and a mild detergent.
- Do not use hot water, which increases the corrosive effect of the salt.
- Apply a corrosion protection spray on all metal, including chrome- and nickel-plated, surfaces to prevent corrosion.

After cleaning

- Dry the vehicle.
- To prevent rust, we recommend appropriate care to use according to manufacturer's instructions.
- Wax all painted surfaces.

⚠ WARNING

- **Make sure that there is no oil or wax on the brakes or tires.**
- **If necessary, clean the brake discs and brake linings with a regular brake cleaner and wash the tires with warm water and a mild detergent.**
- **Before operating the vehicle, test the braking performance and tires.**

Storage

Short-term (for a few days)

- Always store your vehicle in a cool, dry place and, if necessary, protect it against dust with a vehicle cover.

⚠ WARNING

Please store the vehicle in a well ventilated room with dry air if possible. A place with wet humidity will cause rust.

Long-term (for weeks)

- Clean the vehicle.
- Fill the fuel tank up completely or add if necessary a fuel stabilizer to protect the fuel tank from rusting and the fuel from degradation.

Follow the steps below to cylinders, piston rings, etc. to prevent rusting.

- Remove spark plug cap and the spark plug.
- Put a teaspoon of engine oil into the spark plug hole.
- Push the Electro start button shortly several times to oil the cylinder. (Only in short periods!)
- Put the spark plug back in and put on the spark plug cap.

⚠ WARNING

- **Make sure that during this activity the spark plug has no contact to metallic parts on the vehicle. Lubricate all cables, the pivot points of the levers, the footrests and the kickstand as described.**
- **Check and correct the tire pressure and lift the vehicle, so that neither of the two wheels is on the ground. If this is not possible, turn the wheels every month a little further, so they do not stand on the same area constantly (Stand damage).**
- **Slide a plastic bag over the exhaust to prevent moisture from entering. Remove the battery and charge it as described. Store the battery cool and dry and charge it every 2 months. Do not store the battery in excessively cold or hot areas. (Below 0° C or above 30° C).**

CAUTION

Always perform necessary repairs before storage.

Dimensions

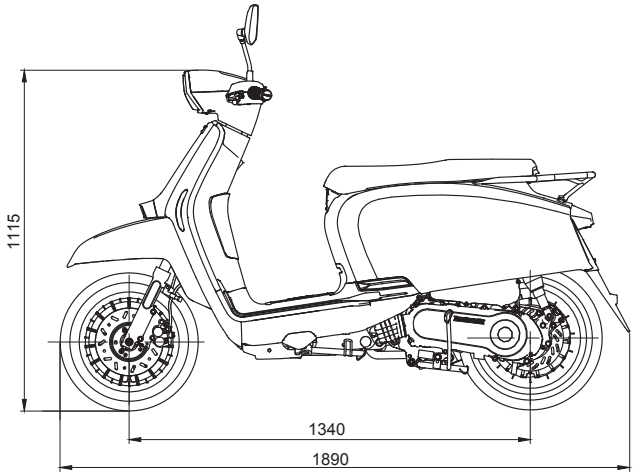

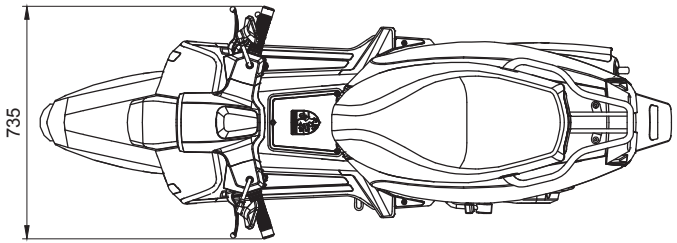

Specifications

Engine	
Type	4-stroke, forced air cooled
Cylinder arrangement	Single cylinder
Displacement	124,6 cm3
Compression ratio	10,7:1
Starting system	Electric starter
Lubrication system	Wet sump lubrication

Engine oil	
Viscosity	4-stroke engine oil 10W-30
Quantity	0,7 l

Transmission oil	
Viscosity	SAE 85W-90
Quantity	0,17 l

Fuel	
Type	Unleaded fuel only, RON/ROZ min. 95
Quantity	6,0 +/- 0,2 l
	E10

Air filter	
Type	Paper element

ECU	
Manufacturer	SYNERJECT

Spark plug	
Manufacturer	NGK
Type	CR7HSA
Spark plug gap	0,6 - 0,7 mm

Clutch	
Clutch type	Dry, centrifugal automatic
Transmission type	V-belt automatic

Chassis	
Type	Steel tube backbone

Tire	
Front tire	
Rim	3,0×12
Tire	110/70-12
Tire air pressure	1,75 bar
Rear tire	
Rim	3,5×12
Tire	120/70-12
Tire air pressure	2,0 bar
The selected tire pressure depends on the load!	

Brake system	
Front brake	
Type	Single Hydraulic disc brake
Size	226mm
Operation (depending on equipment variant)	ABS: Right hand CBS: Right hand or left hand
Rear brake	
Type	Single Hydraulic disc brake
Size	220mm
Operation	Left hand
Brake fluid	
Type	DOT 4

Suspension	
Front suspension	
Type	Telescopic fork
Spring / Shock absorber type	Coil spring / Oil damper
Rear suspension	
Type	Unit swing
Spring / Shock absorber type	2x Gas / Oil damper

Electric system	
Ignition system	ECU
Charging system	ECU Magneto

Battery	
Voltage, capacity	12 V, 6 Ah
USB connector	5V 2A

Lamps	
Headlight	LED
Tail light / Brake light	
Front turn signal light	
Rear turn signal light	
License plate light	

Fuse	
Fuses	10, 15, 20, 30 A

Space for notes

Space for notes

Distributed by:
KSR Group GmbH
Im Wirtschaftspark 15
3494 Gedersdorf
Austria

The copyright is owned by the Company / Manufacturer:
Lambretta GmbH
Im Wirtschaftspark 15
3494 Gedersdorf
Austria

Copyright © 2019
All rights reserved.
This user manual is copyrighted.
Copying in mechanical, electronic or any other form without the written permission of the manufacturer is prohibited.

lambretta.com

Part of Lambretta Consortium

Product and specifications are subject to change without notice.